FEMALE END VIEW

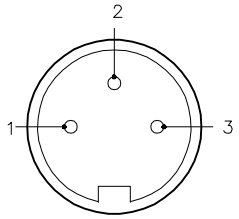

1 = WHITE
2 = GREEN/YELLOW
3 = BLACK

M16 connector

PANEL CUTOUT

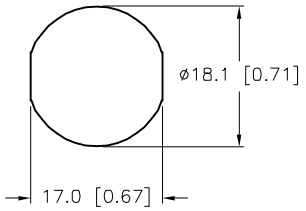

SPECIFICATIONS

CONTACT CARRIER MATERIAL/COLOR	TPU/BLACK
CONTACT MATERIAL/PLATING	TeCU/GOLD
HOUSING MATERIAL/PLATING	BRASS/NICKEL
O-RING MATERIAL	NITRILE
RATED CURRENT [A]	15.0 A
RATED VOLTAGE [V]	600 V
CONDUCTOR INSULATION MATERIAL	PVC
NUMBER OF CONDUCTORS [AWG]	3x14 AWG
TEMPERATURE RANGE	-40°C to +105°C (-40°F to +221°F)
PROTECTION CLASS	MEETS NEMA IEC IP67
PANEL THICKNESS	MIN: 2.0mm [0.079"], MAX: 8.1mm [0.32"]

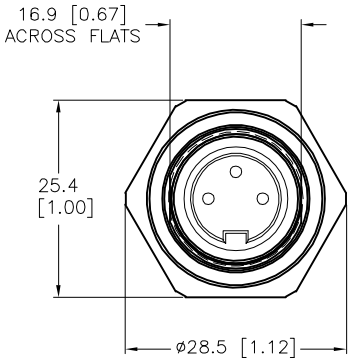

END VIEW
LOCKNUT NOT SHOWN

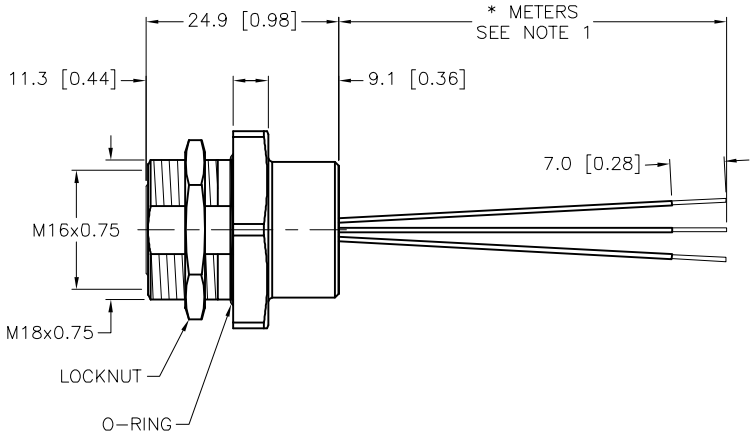

CABLE LENGTH	TOLERANCE *
ALL LENGTHS	+ 4% (OR 50mm) OF LENGTH - 0% (OR 0mm) OF LENGTH WHICHEVER IS GREATER
STRIP LENGTH	**TOLERANCE ***
0-7mm	±0.5mm
8-29mm	±1.0mm
30-49mm	±2.0mm
50-69mm	±3.0mm
70-100mm	±4.0mm
OVER 100mm	±5.0mm
* UNLESS OTHERWISE SPECIFIED	

CAUTION:
RISK OF ELECTRICAL SHOCK
DO NOT DISCONNECT UNDER LOAD

SOURCE DRAWING - FOR REFERENCE ONLY

NOTES:

1. "*" INDICATES LEAD LENGTH IN METERS. CONTACT TURCK TO ORDER SPECIFIC LENGTH.

REV	DESCRIPTION	BY	DATE	ECO NO.
H	UPDATE CONDUCTOR COLOR	NF	09/14/17	62162

RELATED DOCUMENTS
1.
2.
3.
4.

3RD ANGLE PROJECTION

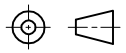

THIS DRAWING IS CONFIDENTIAL AND THE PROPERTY OF TURCK INC. USE OF THIS DOCUMENT WITHOUT WRITTEN PERMISSION IS PROHIBITED.

TURCK

3000 CAMPUS DRIVE
MINNEAPOLIS, MN 55441
1-800-544-7769
(763) 553-7300
(763) 553-0708 fax
www.turck.us

MATERIAL: SEE SPECIFICATION

FINISH: SEE SPECIFICATION

ALL DIMENSIONS DISPLAYED ON THIS DRAWING ARE FOR REFERENCE ONLY

CONTACT TURCK FOR MORE INFORMATION

DRFT: GAR | DATE: 12/20/06
APVD: | SCALE: 1=1.0

UNIT OF MEASUREMENT
MILLIMETER [INCH]
DO NOT SCALE THIS DRAWING

DESCRIPTION: BKFD 34-*/M18

IDENTIFICATION NO.:

REV: H

FILE: 777011605 | SHEET 1 OF 1